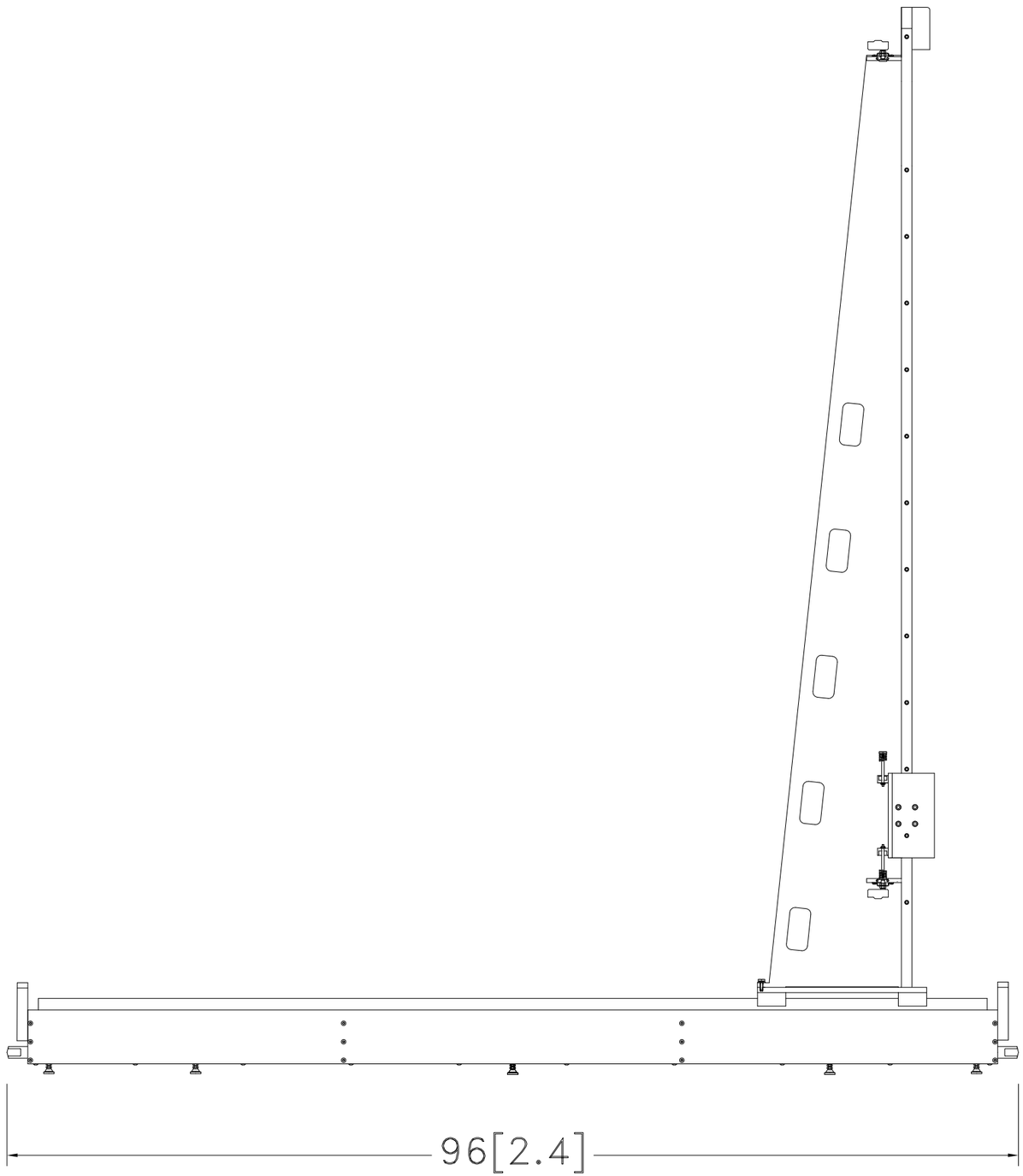

FRONT VIEW

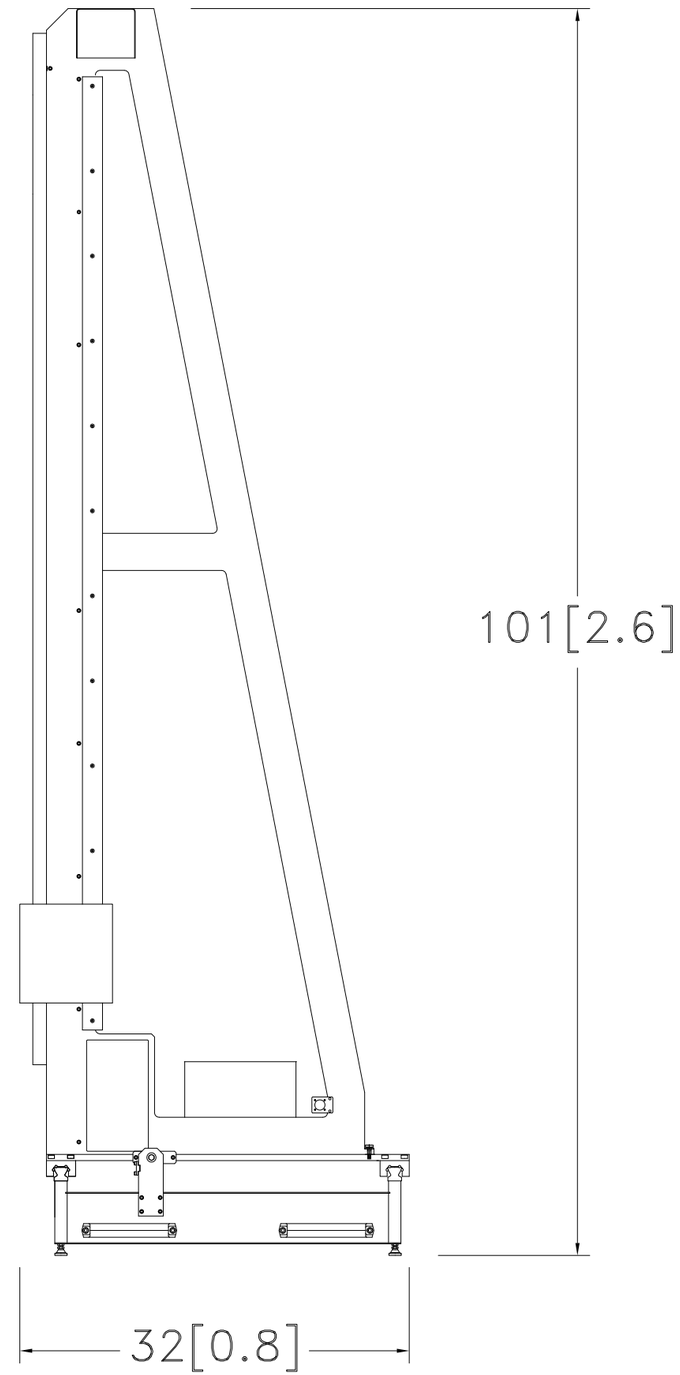

SIDE VIEW